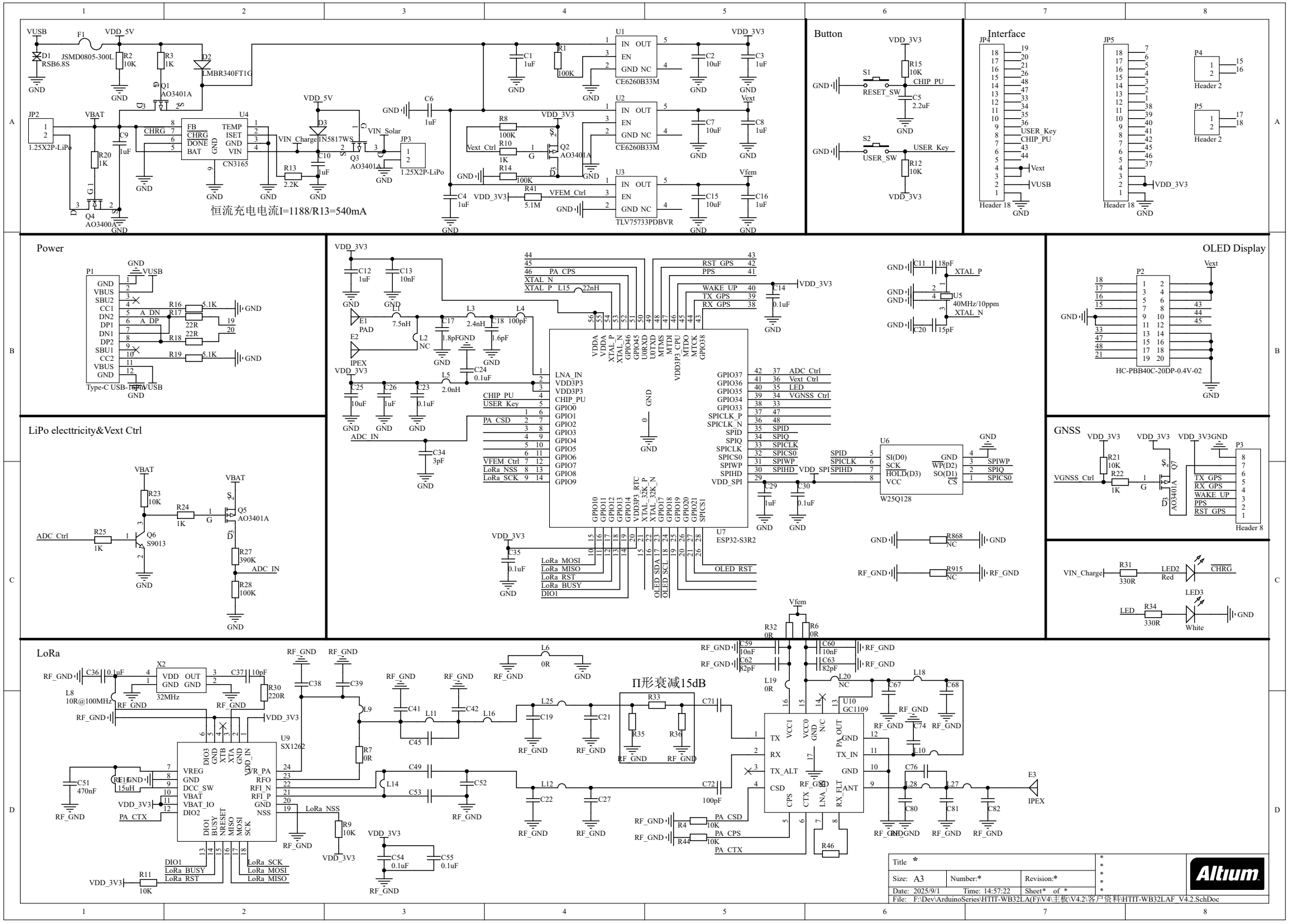
Button
Interface
Power
OLED Display
LiPo electtricity&Vext Ctrl
GNSS
LoRa
恒流充电电流I=1188/R13=540mA
Π形衰减15dB
U1 CE6260B33M
U2 CE6260B33M
U3 TLV75733PDBVR
U4 CN3165
U7 ESP32-S3R2
U9 SX1262
U10 GC1109
U6 W25Q128
P1 Type-C USB-16pin
P2 HC-PBB40C-20DP-0.4V-02
P3 Header 8
JP2 1.25X2P-LiPo
JP3 1.25X2P-LiPo
JP4 Header 18
JP5 Header 18
P4 Header 2
P5 Header 2
E1 PAD
E2 IPEX
E3 IPEX
U5 40MHz/10ppm
Title *
Size: A3
Number:*
Revision:*
Date: 2025/9/1
Time: 14:57:22
Sheet* of *
File: F:\Dev\ArduinoSeries\HTIT-WB32LA(F)\V4\主板\V4.2\客户资料\HTIT-WB32LAF_V4.2.SchDoc
Altium