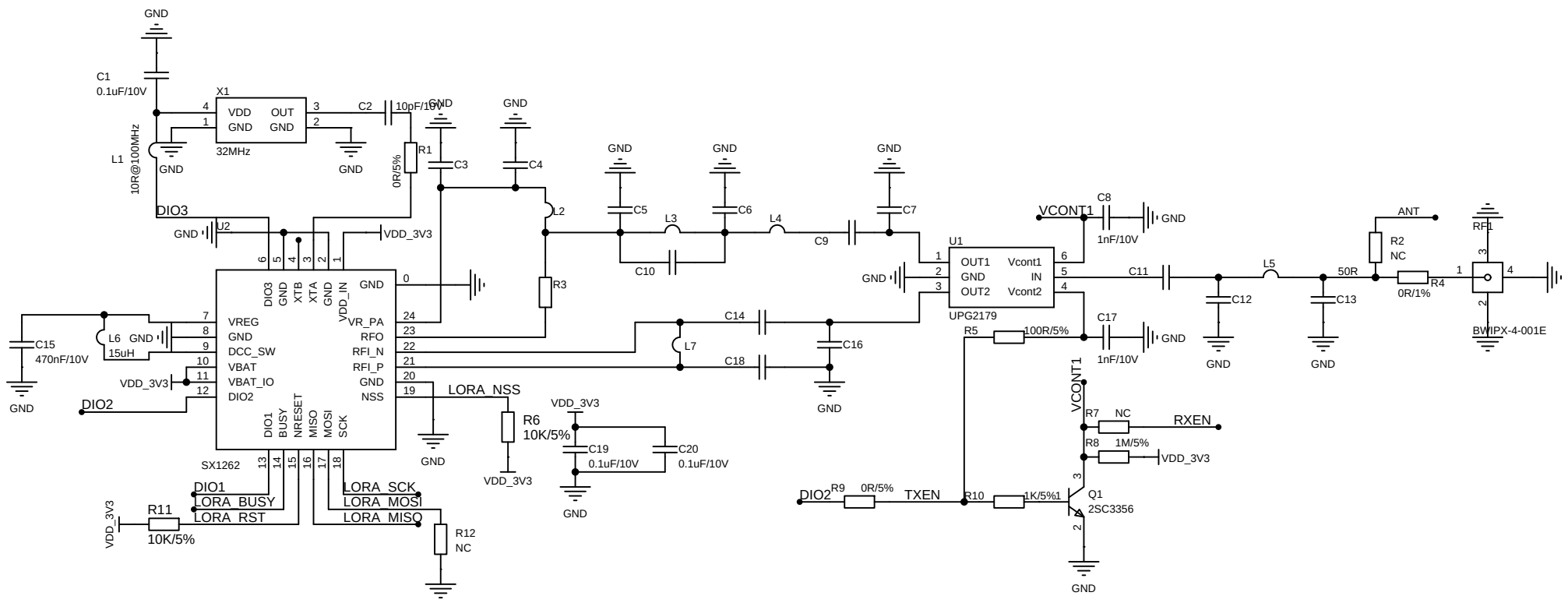

HT-RA62A_Schematic diagram

https://heltec.org